PETER electronic

Soft Starter
VersiStart II plus 6-32A
Assembly- and Commissioning Instructions
Original

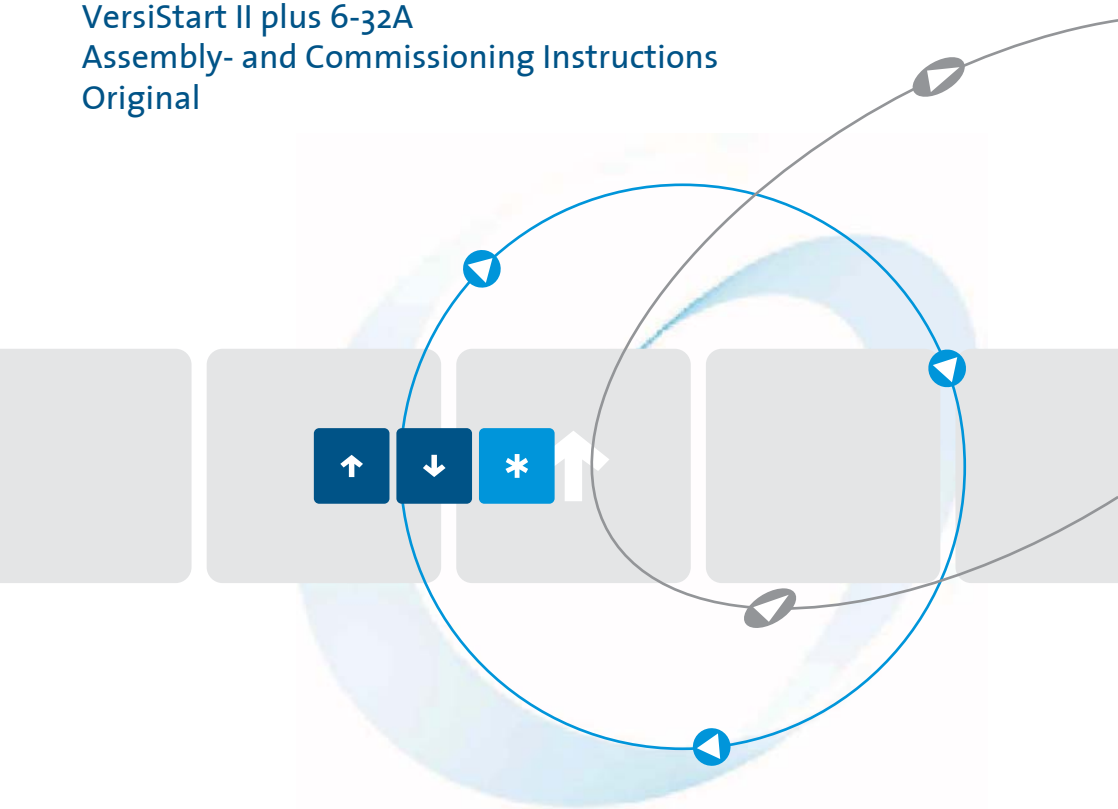

Quality is our Drive.

as per 08/25 16300.10005

Table of Contents **Page**

1. Quick start 3
2. Safety notes 4
3. Conformity 4
4. General description 5
5. Usage to the intended purpose 5
6. EC Declaration of Conformity 6
7. Block diagram 7
8. Commissioning 7
   - 8.1 Mounting instructions 8
   - 8.2 Connection 10
   - 8.3 Parameter settings 11
   - 8.4 Starting frequency 11
9. Starting and stopping 12
   - 9.1 Soft start 12
   - 9.2 Soft stop 14
10. Control in- and outputs 15
11. LED indicators 15
   - 11.1 Indicating elements 15
12. Technical data 16
   - 12.1 Environmental conditions 17
13. Dimensioning rules 17
   - 13.1 Dimensioning of fuses for device protection 17
   - 13.2 Determining the permissible starting frequency: 19
14. Installation guideline 21
   - 14.1 Connection 21
   - 14.2 Connection examples 22

These commissioning instructions were prepared with great care. Nevertheless, PETER electronic GmbH & Co. KG does not assume liability for damage resulting from mistakes possibly contained in this manual. Technical changes that serve to improve the product are subject to change without notice.

Disposal Instructions

Equipment containing electrical components may not be disposed of together with domestic waste. It must be collected separately as electrical and electronic waste according to local and currently valid legislation.

Notes and symbols used in these instructions

Note: Notes explain the advantages of certain adjustments or settings and help you to make use of the device in the best possible way.

Warning notices: Read them carefully and follow them strictly!

Warning notices are indicated in order to protect you against danger or to help you to prevent the device from being damaged.

Caution: Danger to life through electric shock!

When you see this sign, always make sure that the device is de-energized and secured against unintentional energizing.

1. Quick start

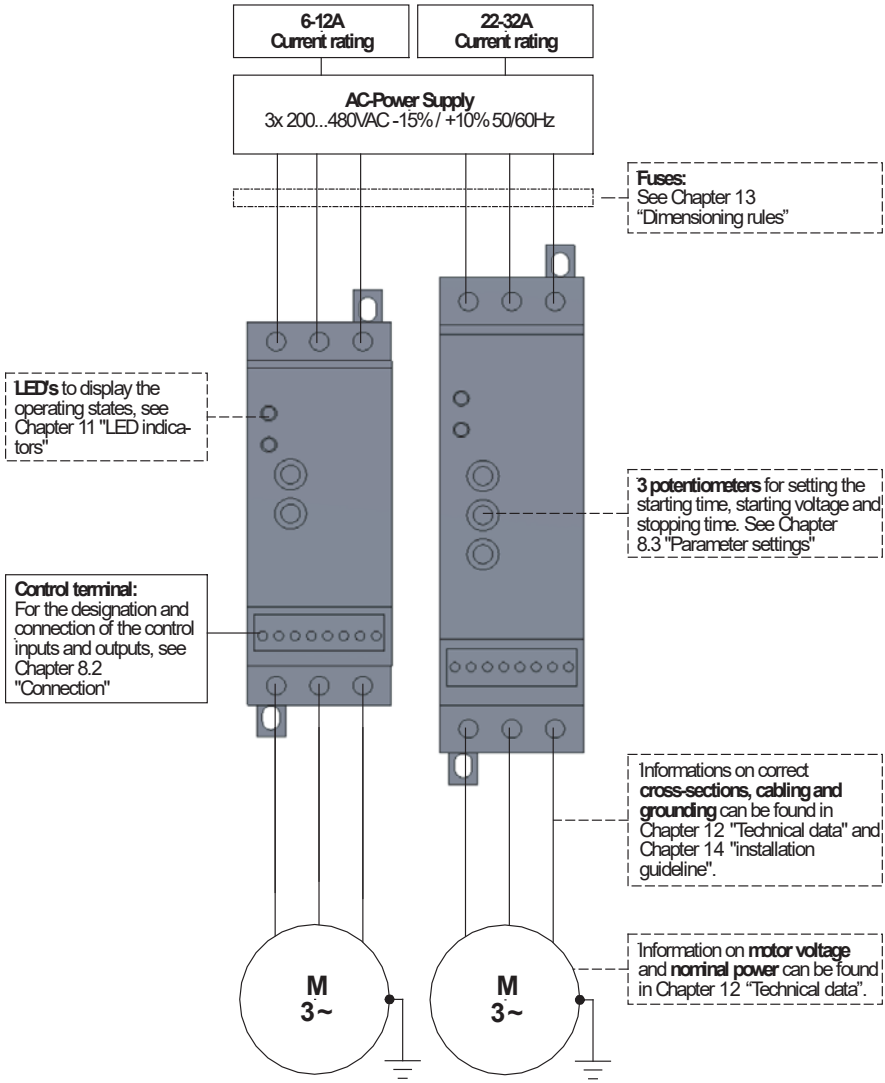

2. Safety notes

The described devices are electrical equipment for use in industrial electrical power installations. An impermissible removal of the covers during operation can cause serious damage to your health, since these devices contain live parts with high voltages.

Adjustment work may only be performed by trained staff observing the safety regulations. Assembly and mounting work may only be carried out with the equipment deenergized.

Make sure that all drive components are properly earthed.

Please read these commissioning instructions carefully before putting the device into operation.

Besides, the user must ensure that the devices and associated components are fitted and connected in accordance with the appliable local, legal and technical regulations. The VDE-regulations VDE 0100, VDE 0110 (EN 60664), VDE 0160 (EN 50178) , VDE 0113 (EN 60204, EN 61310),VDE 0660 (EN 50274) plus the appropriate regulations of the TÜV (Technical Control Association) and the trade associations apply in Germany.

The user must ensure that the drive turns into a safe operating state following a device failure, in the event of maloperation, or if the control unit has failed etc..

Caution: Even if the motor is at rest, it is **not** physically separated from the mains.

3. Conformity

In industrial linguistic usage the drive controllers of the type series VersiStart II plus 6-32A are called "devices", however, in the sense of the "law on the safety of equipment", the "EMC-law" or the "EC-maschinery directive" they are not devices or machines ready for use or connection but they are components. It is only possible to define their final function, when these components are integrated into the design and construction of the user.

To be able to use the devices to their intended purpose, it requires power supply networks according to DIN EN 50160 (IEC38).

The user takes the responsibility that the user's design and construction comply with the applicable legal provision.

The commissioning is strictly forbidden as long as the conformity of the final product with the guidelines 2006/42/EC (Machinery directive) and 2006/95/EC (Low voltage directive) is not proved.

4. General description

In the case of the soft starters of the VersiStart II plus 6-32A type the motor voltage is changed in two phases (1L1/3L2) by a generalized phase control and power semiconductors. Starting from an adjustable starting trigger angle the trigger angle is continually reduced. Via the adjusted ramp-up time the motor voltage increases according to a ramp function until the maximum value is reached. When the acceleration time is over, the power seminconductors are bypassed by integrated relays and the motor is directly supplied with power from the mains.

After opening of the start/stop-contact, the trigger angle is continuously increased via a ramp-function, and, as a result, the motor voltage is decreased. The motor softly decelerates with the adjusted deceleration time.

Acceleration time, starting voltage and deceleration time can be separately adjusted via potentiometers.

The VersiStart II plus 6-32A can be started/stopped using a 2-wire or 3-wire control, see “Connection examples” on page 22.

The boost function is switched on by a HIGH level (24VDC) on the “BOOST” terminal. This means that a higher starting voltage is switched to the motor for 0.3s at the beginning of the soft start.

The control electronics are powered by an external power supply (24VDC +-10% / 100mA).

The devices are suitable for operating three-phase motors in a star or delta connection.

5. Usage to the intended purpose

The devices of the VersiStart II plus 6-32A series are electrical equipment that is used in industrial electrical power installations. They are designed for application in machines, in order to reduce the starting torque and starting current peaks as well as the tripping torque of drives with three-phase induction motors.

Typical Applications:

- door and gate drives
- pumps, ventilators, fans
- conveying systems
- packaging machines
- transport systems, assembly lines
- machine applications

6. EC Declaration of Conformity

PETER electronic

EC Declaration of Conformity CE

The manufacturer / company placing the product on the market
(authorized representatives of the manufacturer / companies placing the product on the market that are established within the Community)

Name / Address:	PETER electronic GmbH & Co. KG Bruckäcker 9 92348 Berg Germany

hereby declares that the following product (device, component, unit) in the version as supplied

Product designation:	**Soft starters**
Series / type designation:	VS II plus 480-6 ... 32 B, 24VDC
Article number:	26300.48...
Year of manufacture:	2023

complies with the provisions of the following EU-directives:

2014/30/EU	Electromagnetic compatibility
2014/35/EU	Electrical equipment designed for use within certain voltage limits
2011/65/EU	The restriction of the use of certain hazardous substances in electrical and electronic equipment

The following harmonized standards have been applied:

DIN EN 60947-4-2:2012	Low-voltage switchgear and controlgear Contactors and motor-starters - AC semiconductor motor controllers and starters

This EC Declaration of Conformity is no longer valid, if the product is modified or changed without our agreement.
This declaration is issued under the sole responsibility of the signatory.

Berg, 16.02.2023	Dr. Thomas Stiller, Managing director	
(place, date)	(signatory and function of the signatory)	(signature)

7. Block diagram

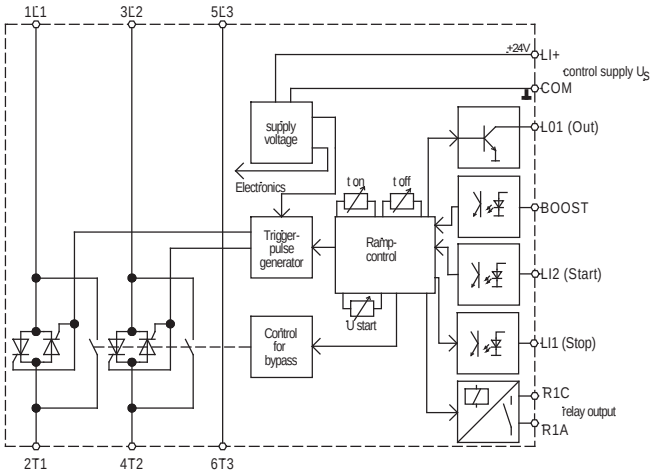

8. Commissioning

The device is to be put into operation in 3 steps:

1. Mounting
2. Connection and
3. Parameter setting

Please notice the max. permissible starting current (“Technical data” on page 16) .

8.1 Mounting instructions

Caution: Danger to life through electric shock!

The following conditions are to be complied with in order to ensure a safe and reliable operation of the VersiStart II plus 6-32A.

1. The device series VersiStart II plus 6-32A is to be used under conditions of the overvoltage category III.
2. Make sure that pollution degree 2 or better, in accordance DIN EN60644-1 / IEC664, is complied with.
3. The device has to be installed into a housing (min. degree of protection: IP54). Please take care of a sufficient heat dissipation.
4. The device must be operated without being exposed to contamination by water, oil, carbon deposits, dust, etc..
5. Insert in North America, UL and CSA-listed.
   Utilisation en Amérique du Nord, certifié UL et CSA.

5.1 Wiring diagram: see Table 14.2, “Connection examples,” on page 22
Schéma de câblage : voir Tableau 15.2, " Schéma de raccordement général ", à la page 25.

5.2 The terminal tightening torque of lbs-in (Nm): see Table 12, “Technical data,” on page 16
Couple de serrage des bornes en lbs-in (Nm) : voir Tableau 13, " Caractéristiques techniques ", à la page 17.

5.3 To be used in a Pollution Degree 2 environment only.
À utiliser uniquement dans un environnement de degré de pollution 2.

5.4 Models VS II plus 6-32A: Suitable for use on a circuit capable of delivering not more than: see “short circuit protection“ on page 18
Modèles VS II plus 6-32A: Convient pour une utilisation sur un circuit capable de délivrer au plus: voir page 19 „short circuit protection“

5.5 Surrounding temperature max. 40°C
Température ambiante 40 °C max.

5.6 Use copper conductors 75°C only
Utiliser uniquement des conducteurs en cuivre 75°C

5.7 Connect only to isolated power supply rated 24VDC. Fuse in accordance to UL248 rated max. 4A shall be installed between the source and input terminal of the unit, or equivalent wording.
Modèles avec suffixe BUc24VDC ou BIUc24VDC - signalant la tension de contrôle externe : connecté uniquement à une alimentation isolée de 24 VDC. Le fusible homologué UL248 de 4A max. doit être installé entre la source et la borne d'entrée de l'unité, ou équivalent.

Place the device vertically on a vertical mounting surface. The motor terminals must be mounted downwards. The devices can be attached to the mounting surface using screw mounting or by snapping onto standard rails in accordance with DIN EN 50022:

Screw mounting:

Drilling pattern 6 - 12A devices

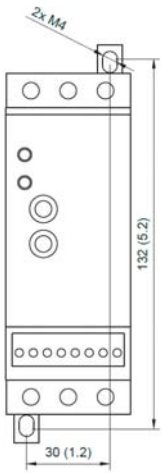

Drilling pattern 22 - 32A devices

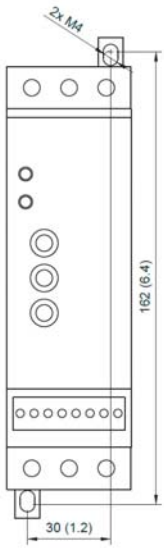

DIN rail mounting:

6 - 32A devices

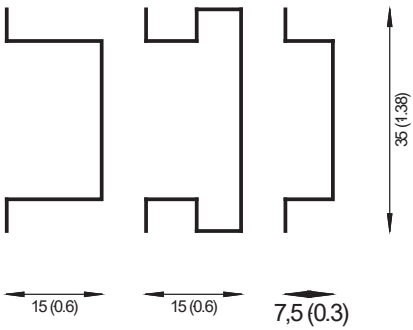

all dimensions in mm (in.)

No additional heat sources, such as devices with high power losses, heating resistors or similar, may be located below the device.

When installing the VersiStart II plus devices side-by-side, a distance of 9mm between the devices is required.

8.2 Connection

Power section (see also connection diagram)

Terminal 1L1:	Mains voltage L1
Terminal 3L2:	Mains voltage L2
Terminal 5L3:	Mains voltage L3
Terminal 2T1:	Motor terminal U
Terminal 4T2:	Motor terminal V
Terminal 6T3:	Motor terminal W

Control section

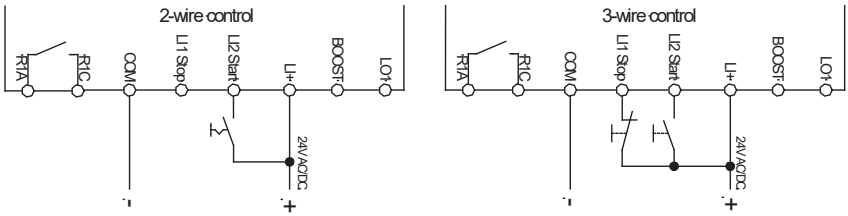

The input resistance of the control inputs is 10kOhm. Switching contacts must be used for control, which can safely switch the lower control currents. (e.g. AgNi+Au)!

2-wire control:

If the switch at the "LI2 Start" input is closed, the motor starts with the set start-up time ramp. If the switch at the "LI2 Start" input is opened, the motor runs down with the set deceleration time ramp.

3-wire control:

Pressing (min. 200ms) the button at the "LI2 Start" input starts the soft start of the motor with the set start-up time ramp. Pressing (min. 500ms) the button at the "LI1 Stop" input stops the motor with the set deceleration time ramp.

Control supply voltage Us

The VersiStart II plus 6-32A device series is supplied with a direct voltage of 24VDC ±10% / 100mA between the terminals LI+ and COM.

Caution: Danger to life through electric shock!

The motor is **not** physically separated from the mains.

8.3 Parameter settings

On the front panel there are 3 potentiometers by means of which the following settings can be made.

Parameter	Poti	Setting range
Acceleration time	t ⎍	Acceleration time adjustable from 1...10sec
Starting voltage	U_{Start}	30…80% of rated voltage
Deceleration time	t ⎍	adjustable from 1...10sec

Default setting of potentiometers

Potentiometer	t ⎍ :	5 sec.	= mid-position
Potentiometer	U_{Start} :	60%	= mid-position
Potentiometer	t ⎍ :	5 sec.	= mid-position

8.4 Starting frequency

It must be possible for the device or rather the power semiconductors to cool off sufficiently between two starts.

If the starts are carried out too quickly, there is a risk of thermal overloading of the power semiconductors and thus destruction. Longer operation in the bypassed condition also serves to cool down the power semiconductors.

See “Determining the permissible starting frequency:” on page 19.

Warning:

If the time interval between starts is too short, there is the danger of damaging or destroying the power semiconductors.

9. Starting and stopping

9.1 Soft start

With VersiStart II plus 6-32A devices, different starting methods can be selected:

1. Voltage ramp:
2. Boost function:

1. Start with voltage ramp:

   In this case, motor starting is time-controlled, with a voltage ramp adjustable within a range from $t_{\nearrow}$ 1s to 10s and a starting voltage U_{Start} adjustable between 30% to 80% of the rated voltage.
   To adjust an optimum starting behavior, you should carry out a test run. Contrary to the factory settings, you should make the following basic potentiometer-settings:

Fans, roller tracks, conveyor belts, etc.	$t_{\nearrow}$ 5s, U_{Start} 45%, $t_{\searrow}$ 0s
Centrifuges, conveyor screws, mixers, compressors, etc.	$t_{\nearrow}$ 5s, U_{Start} 45%, $t_{\searrow}$ 5s
Pressure pumps, etc.	$t_{\nearrow}$ 5s, U_{Start} 45%, $t_{\searrow}$ 5s

   Switch on the supply voltage and start acceleration. Watch the starting behavior and adapt the approporiate parameters to your drive. At any rate, the starting voltage should be adjusted with the potentiometer U_{Start} so that the motor starts immediately. At the same time, unnecessary humming with the motor being at rest is to be avoided.
   The potentiometer $t_{\nearrow}$ is to be adjusted so that the requested acceleration time or starting characteristics is achieved. The acceleration time should always be chosen as short as possible, in order to keep the thermal stress acting on device and motor as small as possible. This leads to short times until the bypass relays pull in and ensures good acceleration characteristics while the power semiconductors and motor are less heated. This is of special importance in the case of high-inertia starting or high switching frequencies. The acceleration time, however, has to be adjusted so that the motor reaches nominal speed before the internal bypass relays closes.

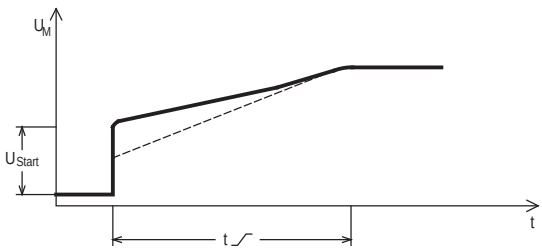

2. Start with boost function:

   If a high level is applied to the “BOOST” input, the device switches to the “soft start with boost” function. At the beginning of the soft start, the motor voltage is increased to 80% of the mains voltage for a short pulse (300ms).
   This function causes an increased breakaway torque in the drive and enables drives with high holding torques to be started at standstill.
   Afterwards, the soft start will be continued with the adjusted voltage ramp.

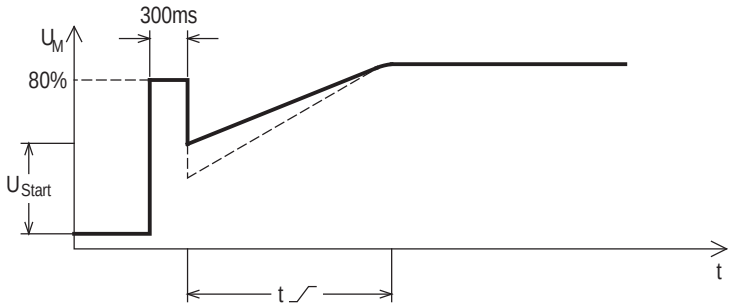

Warning:

If the adjusted acceleration time is too short, the internal bypass relays close **before** the motor has reached nominal speed. This can cause damage to the bypass relays.

9.2 Soft stop

Note: Soft stop is only useful for pump drives or applications in the case of which the drive comes to a stop **immediately** after switch off. In the case of drives driving high-inertia loads, soft stop is not sensible.

Note: **To enable soft stop, the VersiStart II plus 6-32A, during the deceleration phase, has to be supplied with power from the supply mains.**

In the case of these devices, the cut-off voltage is factory-set to 70%.

The potentiometer t is to be adjusted so that the requested deceleration time or deceleration characteristic is reached.

Caution: Danger to life through electric shock!

Even if the motor is at rest, it is not physically separated from the mains.

Warning!

Make sure that the specified switching frequency is not exceeded! After every start, it is necessary to give the power semiconductors sufficient time to cool down. If the time interval between starts is too short, there is the danger of destroying the power semiconductors!
Operation in bypassed condition also allows the power semiconductors to cool down!

Note: If, in the motor circuit, a motor contactor that closes with the starting contact is used, the deceleration time t is to be set to 0s.

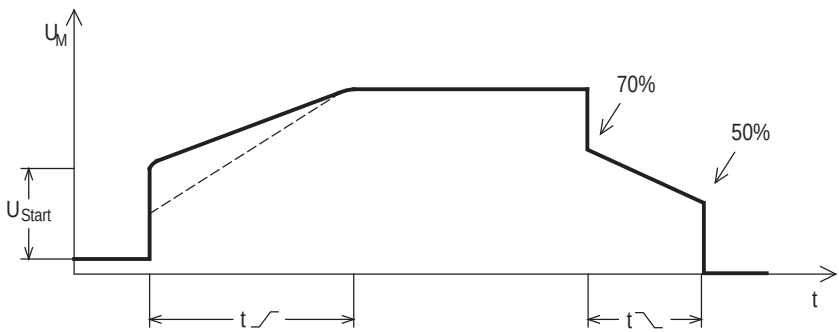

10. Control in- and outputs

Connection	Description	Input/ Output	Properties
LO1	Digital Output	Output	Open collector output. Output switches when start-up ramp is completed.
BOOST	Activation of boost function	Input	27 kOhm impedance
LI+	Power supply	Input	+24VDC ± 10 % (max. 28V / 100mA)
LI2 Start	Start input	Input	27 kOhm impedance
LI1 Stop	Stop input	Input	27 kOhm impedance
COM	Ground	Input	0V
R1C	potential free contact - closes as soon as the motor is running.	Output	Max. switching capacity with ohmic load: 2A/250VAC 2A/30VDC
R1A			

11. LED indicators

11.1 Indicating elements

On the device front panel there are 2 light-emitting diodes indicating the following operational states:

LED	Operational status
Green	Device connected to control supply voltage
Yellow	Softstart completed, device in bypass state

12. Technical data

Technical specifications	VS II plus 480-6 B, 24VDC	VS II plus 480-9 B, 24VDC	VS II plus 480-12 B, 24VDC	VS II plus 480-22 B, 24VDC	VS II plus 480-32 B, 24VDC
device rated current	6A	9A	12A	22A	32A
motor rated power at 400V mains voltage	3kW	4,5kW	5,5kW	11kW	15kW
mains / motor voltage	3x 200...480VAC -15% / +10% 50/60Hz				
control voltage	24VDC ±10% (max. 28VDC) / 21,6W				
order number	26300.48006	26300.48009	26300.48012	26300.48022	26300.48032
max. power loss:					
- on standby	<3W	<3W	<3W	<3W	<3W
- in ramp-up	62W	92W	122W	223W	323W
- in bypass	1,5W	1,5W	1,5W	2,5W	2,5W
minimum motor current	20% of the device rated current				
start-up time	1 ... 10s				
starting voltage	30 ... 80%				
run-out time	1 ... 10s				
max. switching frequency at 3xIe, 5s t_{an} and ED=70%	20				10
cross-sectional area control terminals	AWG 20...14 0,5 - 1,5mm² (stripping length 10mm)				
cross-sectional area power terminals	AWG 16...10 1...6mm²				
tightening torque	power terminals 1,9 ... 2,5Nm control terminals 0,5 Nm				
I^2t —power semiconductor in A^2s	390			9100	
switching rating of relay output	2A / 250VAC / 30VDC				
overvoltage category / pollution degree	Power contacts: 3 / Auxiliary contacts (Output Relays): 2 2				
surge strength	Power contacts 4kV / Auxiliary contacts (Output Relays): 2,5kV				
insulation voltage	480VAC				
Category of use	AC53b: 6-3: 117				
protection class	IP20				
ambient / storage temperature	-10°C ... 50°C (Derating: higher 40°C - 2% per °C up to max. 50°C) -25°C ... 70°C				
relative humidity	5...95% without condensation or dripping water (corresponds to EN/IEC 60068-2-3)				
weight in kG	0,3kG			0,5kG	
Dimensions W x H x D	45 x 124 x 131 mm			45 x 154 x 131 mm	

12.1 Environmental conditions

Storage temperature	-25 ... 85°C
Ambient temperature	-10 ... 50°C up to 1000m installation height, non-condensing
Power reduction[1)]	Derating: higher 40°C - 2% per °C up to max. 50°C
Degree of protection	IP 20
Environment	Overvoltage categ. III (TT / TN-systems) pollution degree 2
Installation class	2

[1)] The reductions refer to the rated device current.

Note: Please pay attention and consider for the operation of IE3 motors while dimensioning of softstarters the resulting higher starting currents.
For the use of IE3 motors we highly recommend to dimension and design the needed softstarters one size higher.

13. Dimensioning rules

13.1 Dimensioning of fuses for device protection

Pre-fuses F can be dimensioned according to the following instructions.

Basically, two types of fuse protection are available for the user.

1. Fusing according to allocation type „1“, DIN EN 60947-4-2.
   After a short circuit, the VersiStart II device is allowed to be inoperative and repair work is possible.
2. Fusing according to allocation type „2“, DIN EN 60947-4-2.
   After a short circuit, the device must be suitable for further use. However, there is the danger that the contacts of the bypass or braking relays weld. Therefore, if possible, these contacts are to be checked prior to reconnecting these contacts to the mains supply. If this check cannot be carried out by the user, the device has to be returned to the producer in order to have it checked.

The following dimensioning information refers to the below operating conditions:

- Use of standard asynchronous motors
- Standard acceleration and/or deceleration times
- Switching frequencies not exceeding the values specified in the data sheet

Fusing according to coordination class "1"

As pre-fuses, we recommend to use fuses of the utilization category gG.

Short circuit protection according to IEC 60947-4-2 edition 4.0 - with fuse type gG

Device Typ	Icc @440V 3Ph	Fuse value in coordination class “1“	Fuse type (recommendation)
VS II plus...-6...	5kA	16A	NH0gG
VS II plus...-9...	5kA	20A	NH0gG
VS II plus...-12...	5kA	25A	NH0gG
VS II plus...-22...	5kA	50A	NH0gG
VS II plus...-32...	5kA	50A	NH0gG

Short circuit protection according to UL60947-4-2 edition 2 - class J fuses

Model	SCCR @480V 3Ph	Class J Fuse (UL 508)
VS II plus...-6...	5kA	20A
VS II plus...-9...	5kA	30A
VS II plus...-12...	5kA	35A
VS II plus...-22...	5kA	80A
VS II plus... 32...	5kA	100A

Fusing according to allocation type „2“:

The power semiconductors are to be protected by semiconductor protection fuses of the utilization class aR or gR. aR fuses do not guarantee line protection, additional line protection fuses (utilization category gG) must be used.

To protect the semiconductors it is necessary to select fuses featuring cutoff-I^2t-values which are approx. 10-15% below the thershold I^2t-value of the power semiconductor (see technical data). In this connection, the fuse rating of the selected fuse should not be smaller than the starting current to be expected.

Note:

1. PETER electronic does not prescribe the use of semiconductor protection fuses. However, for some UL- or CSA-listed devices there are exceptions which are indicated in the relevant commissioning instructions.
2. On the basis of the I^2t-value of the power semiconductors, the starting time and possibly the max. starting current, the fuse supplier is able to select a suitable type. Due to the great variety of producers, sizes and types, PETER electronic does not recommend any particular fuses.
3. If the value of the fuse or the cutoff-I^2t-value is selected too small, it may happen that the semiconductor fuse reacts during the starting phase or during deceleration.

13.2 Determining the permissible starting frequency:

The starting frequency depends on the:

1. starting current or the heat loss across the power semiconductors.
2. ambient temperature.
3. current carrying capacity and the temperature increase of the power semiconductors.
4. heat sink's capability of absorbing the heat loss and passing the temperature increase on to the environment.

The following diagrams are to assist you in determining the maximum starting frequency per hour, i.e., on the basis of the given maximum starting current and for various starting times.

Should the requested starting frequency not be reached, a different device series has to be chosen.

Example: A 4 kW motor (rated current 9 A) is to be started in a drive. A maximum starting current of 36 A was measured. This corresponds to approximately four times the rated current. A VSII plus 480-12 B, 24 VDC is used. From the corresponding table, a maximum starting frequency per hour of between 300 with a 1 s start-up time and 5 with a 10 s start-up time can be read off.

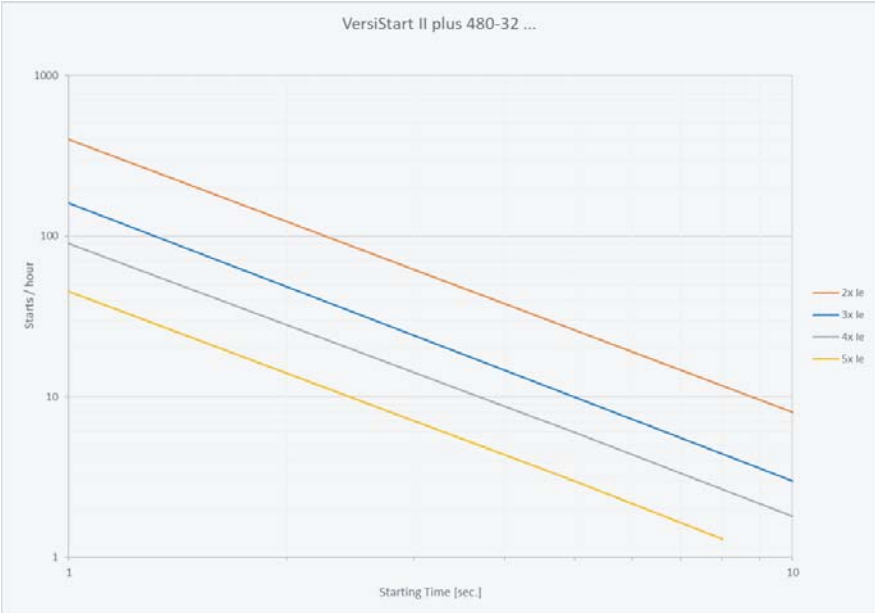
VersiStart II plus 480-32 ...
1000
100
10
1
Starts / hour
1
10
Starting Time [sec.]
2x Ie
3x Ie
4x Ie
5x Ie

14. Installation guideline

The devices are to be installed into a switchbox or switchgear cabinet according to point 8.
It must be ensured that the switchbox/switchgear cabinet is capable of dissipating the occurring heat loss (see techn. data).

14.1 Connection

The device is to be installed according to the attached connection diagram. For other connections please consult PETER electronic GmbH & Co. KG.

14.1.1 Wiring

To avoid EMI couplings into the electronics and the disturbances they involve, it must be ensured that the control lines routed separately in separate cable ducts and as far as possible away from the power cables. If control lines crossing power lines, they have to be laid at an angle of 90° (Figure 1).

When connection shielded cables make sure that the unshielded cable ends are as short as possible. The large-surface shield bonding must not necessarily be located on the end of the shielding but may also be established in a suitable place - at a distance of some centimetres. The shield must always be connected on both ends to ground (Figure 2).

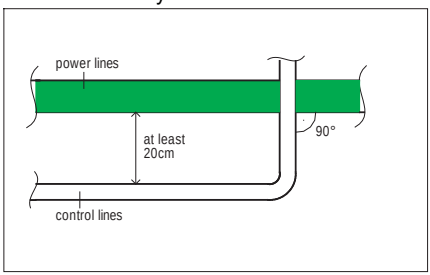

Figure 1

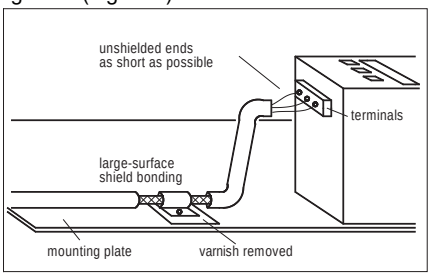

Figure 2

Caution!

The protective conductor connection to the motor must no be laid in shielded motor cables, but is to be separately laid with an appropriate cross-sectional area. The individual earthing systems, power earth, protective earth, digital earth, and analog earth conductors should be laid separately by using a suitable star-point wiring.

14.2 Connection examples

14.2.1 2-/3-wire control with motor protection switch

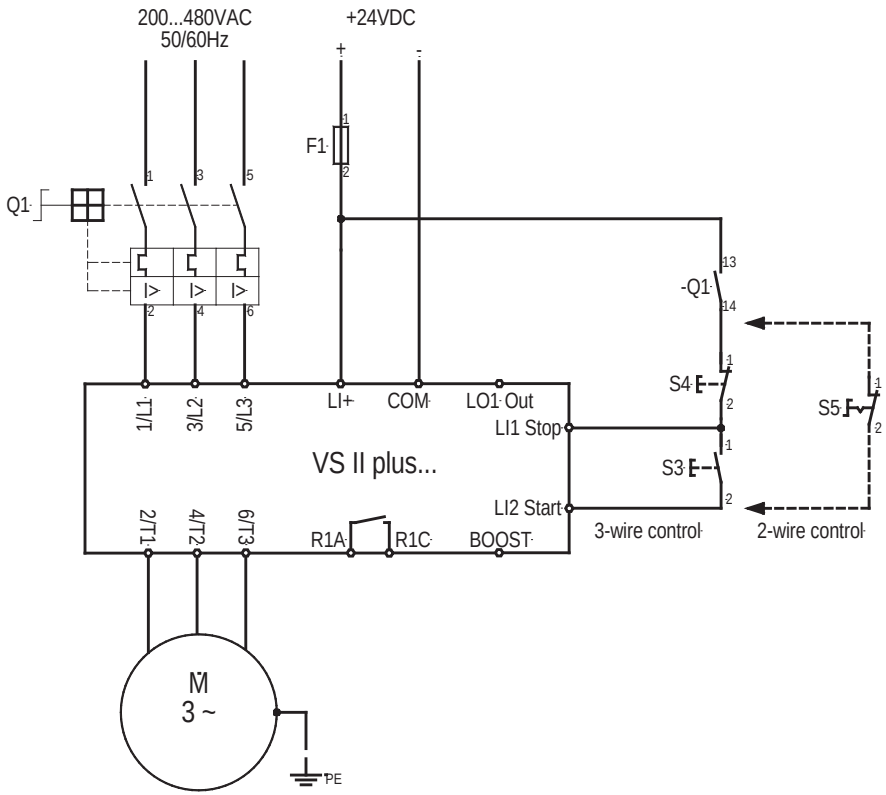

Functional diagram for the 2-wire control:

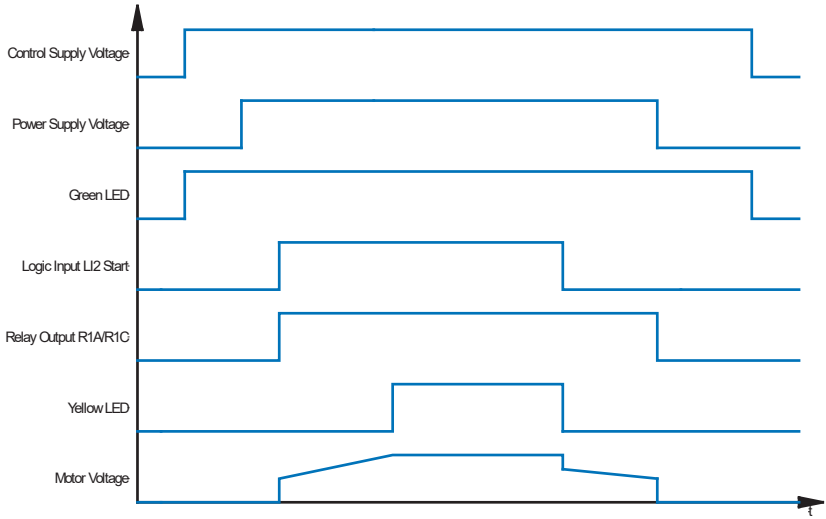

Functional diagram for the 3-wire control:

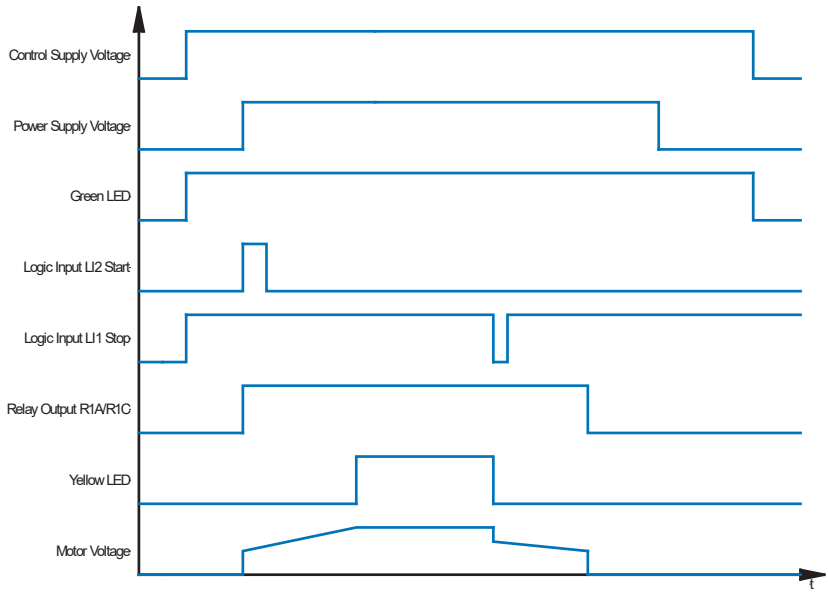

14.2.2 3-wire control with motor contactor and overload relay

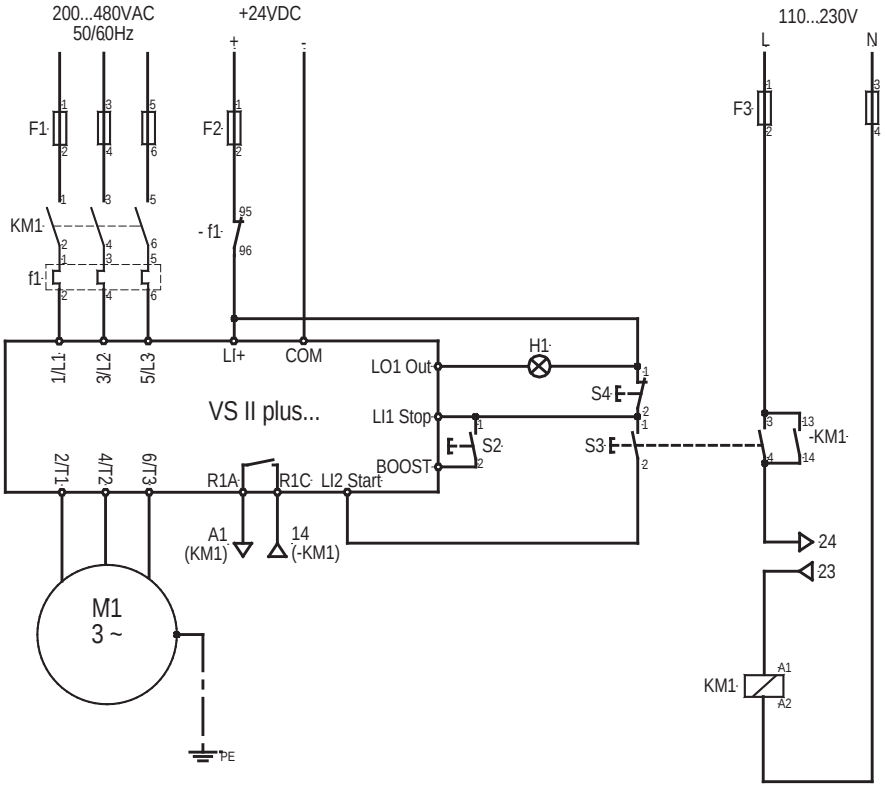

Functional diagram for the 3-wire control:

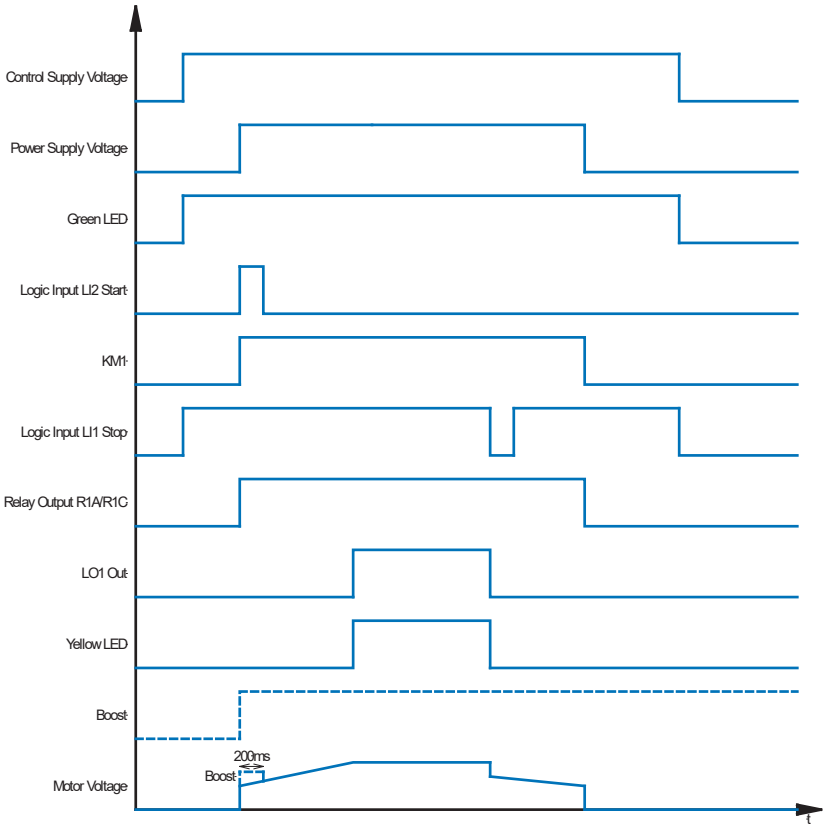

Note: Further connection diagrams for special circuit arrangements are available on our homepage at **www.peter-electronic.com**.

Note: Prior to putting the VersiStart II plus 6-32A into operation the wiring is to be checked.

Telefon: +49(0)9189/4147-0 Telefax: +49(0)9189/4147-47 eMail: mail@peter-electronic.com

www.peter-electronic.com