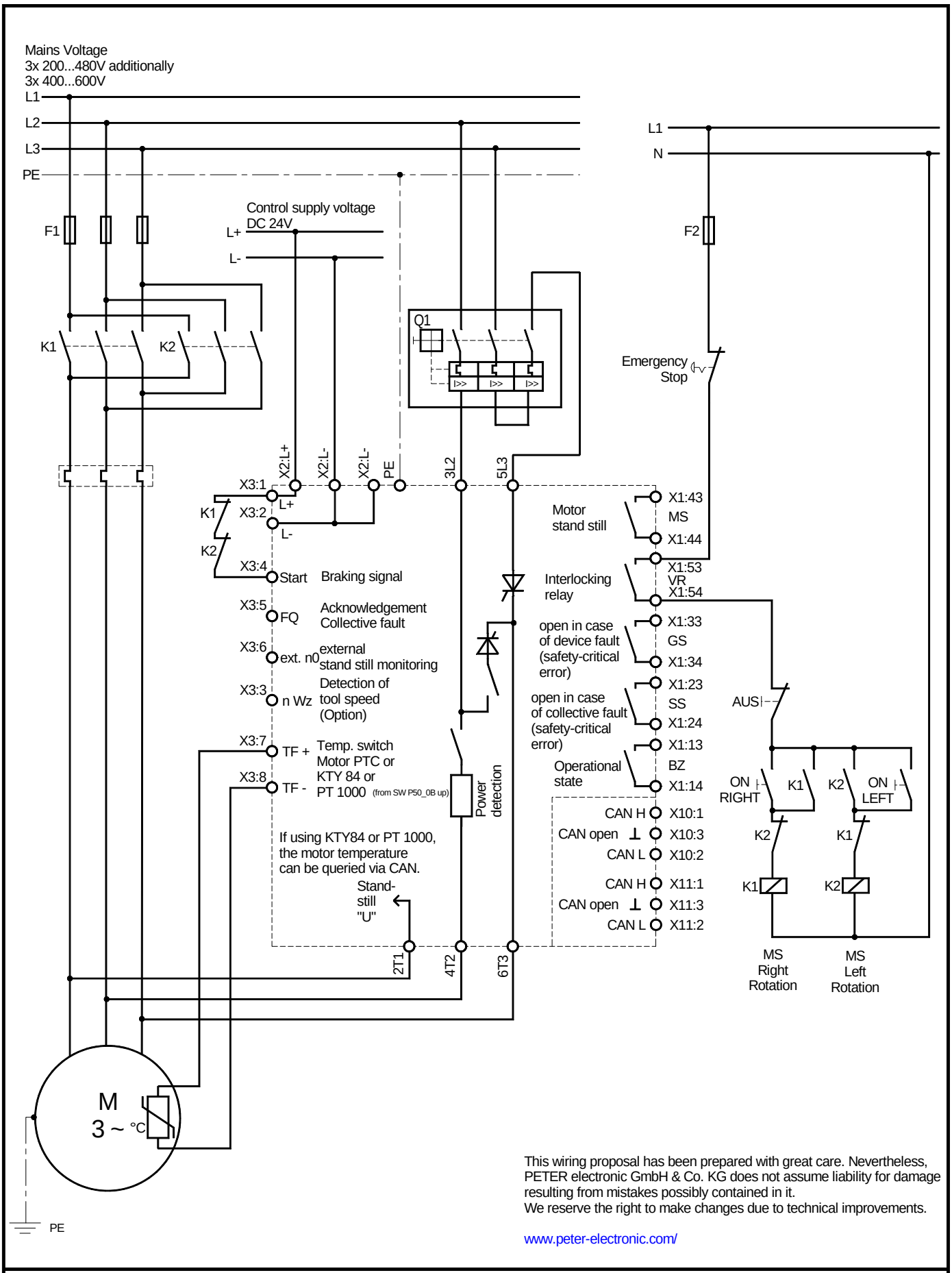

This wiring proposal has been prepared with great care. Nevertheless, PETER electronic GmbH & Co. KG does not assume liability for damage resulting from mistakes possibly contained in it.
We reserve the right to make changes due to technical improvements.

www.peter-electronic.com/

PETER electronic GmbH & Co. KG, Bruckäcker 9, D-92348 Berg, Tel. (09189) 4147-0, Fax (09189) 4147-47

Connection diagram VersiBrake Safe right / left rotation	Nummer:	Verteiler:
Bearb.: Stini	Datum 26.03.2020	Filename: VB_S-Anschlussplan_Rechts-Linkslauf_GB.skf
Geändert:	Geprüft: Tischner	Blatt 1 von 1