PETER electronic

Softstarter
VersiStart II 3 ... 15L..
Assembly- and Commissioning Instructions

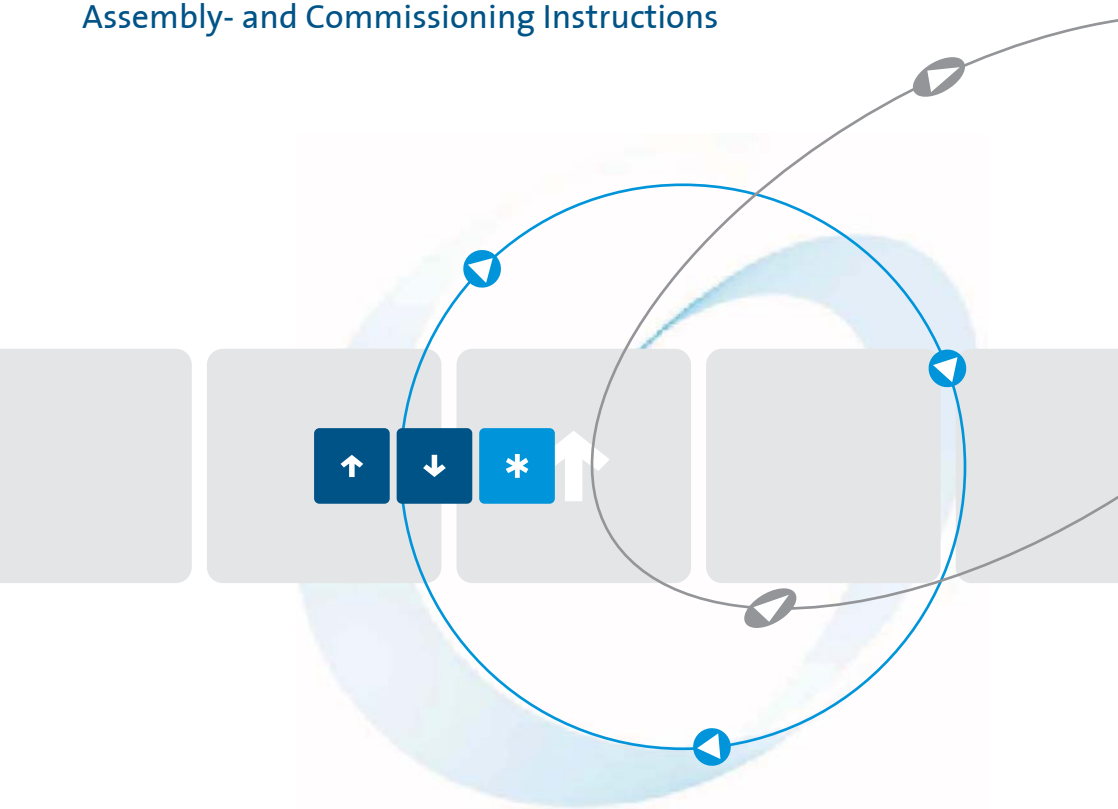

Quality is our Drive.

as per 01/26 15700.10001

Table of Contents

Page

1. Safety notes 3
2. Conformity 3
3. General description 4
4. Usage to the intended purpose 4
5. EC Declaration of Conformity 5
6. Block diagram 6
7. Commissioning 7
   7.1 Mounting instructions 7
8. Connection Power section (see also connection diagram)) 8
9. Connection control section 8
10. LED indicators 9
11. Parameter settings 9
12. Commissioning 10
   12.1 Default setting of potentiometers: 10
   12.2 Adjusting soft start 10
   12.3 Adjusting soft stop 11
13. Technical data 12
   13.1 Environmental conditions 13
14. Dimensioning rules 13
   14.1 Dimensioning of pre-fuses 13
15. Installation guideline 15
   15.1 Connection 15
   15.2 EMC 15
   15.3 Typical connections 17
   15.4 Zeitablaufdiagramm 18
   15.5 Dimensions 19

These commissioning instructions were prepared with great care. Nevertheless, PETER electronic GmbH & Co. KG does not assume liability for damage resulting from mistakes possibly contained in this manual. Technical changes that serve to improve the product are subject to change without notice.

Disposal Instructions

Equipment containing electrical components may not be disposed of together with domestic waste. It must be collected separately as electrical and electronic waste according to local and currently valid legislation.

Notes and symbols used in these instructions

Note: Notes explain the advantages of certain adjustments or settings and help you to make use of the device in the best possible way.

Warning notices: Read them carefully and follow them strictly!

Warning notices are indicated in order to protect you against danger or to help you to prevent the device from being damaged.

Caution: Danger to life through electric shock!

When you see this sign, always make sure that the device is de-energized and secured against unintentional energizing.

1. Safety notes

The described devices are electrical equipment for use in industrial electrical power installations. An impermissible removal of the covers during operation can cause serious damage to your health, since these devices contain live parts with high voltages.

Adjustment work may only be performed by trained staff observing the safety regulations. Assembly and mounting work may only be carried out with the equipment deenergized.

Make sure that all drive components are properly earthed.

Please read these commissioning instructions carefully before putting the device into operation.

Besides, the user must ensure that the devices and associated components are fitted and connected in accordance with the appliable local, legal and technical regulations. The VDE-regulations VDE 0100, VDE 0110 (EN 60664), VDE 0160 (EN 50178) , VDE 0113 (EN 60204, EN 61310),VDE 0660 (EN 50274) plus the appropriate regulations of the TÜV (Technical Control Association) and the trade associations apply in Germany.

The user must ensure that the drive turns into a safe operating state following a device failure, in the event of maloperation, or if the control unit has failed etc..

Caution: Even if the motor is at rest, it is **not** physically separated from the mains.

2. Conformity

In industrial linguistic usage the drive controllers of the type series VersiStart II are called "devices", however, in the sense of the "law on the safety of equipment", the "EMC-law" or the "EC-maschinery directive" they are not devices or machines ready for use or connection but they are components. It is only possible to define their final function, when these components are integrated into the design and construction of the user.

To be able to use the devices to their intended purpose, it requires power supply networks according to DIN EN 50160 (IEC38).

The user takes the responsibility that the user’s design and construction comply with the applicable legal provision.

The commissioning is strictly forbidden as long as the conformity of the final product with the guidelines 2006/42/EC (Machinery directive) and 2006/95/EC (Low voltage directive) is not proved.

3. General description

The devices are suitable for an operation of 3-phase motors in star or delta connection.

In the case of the soft starters of the VersiStart II type the motor voltage is changed in two phases (1L1/5L3) by a generalized phase control and power semiconductors. Starting from an adjustable starting trigger angle the trigger angle is continually reduced. Via the adjusted ramp-up time the motor voltage increases according to a ramp function until the maximum value is reached. When the acceleration time is over, the power seminconductors are bypassed by integrated relays and the motor is directly supplied with power from the mains.

After opening of the start/stop-contact, the trigger angle is continuously increased via a ramp-function, and, as a result, the motor voltage is decreased. The motor softly decelerates with the adjusted deceleration time.

Acceleration time, starting voltage and deceleration time can be separately adjusted via potentiometers.

Acceleration or deceleration are effected by closing or opening of the contact on the terminals X5/X6 or X4.

The boost function is switched on by bridging the terminals X6/X7. Thus, at the beginning of the soft start, an increased starting voltage is applied to the motor for a period of 0,5s.

The power supply to the control electronics is effected via the power section.

4. Usage to the intended purpose

The devices of the VersiStart II-series are electrical equipment that is used in industrial electrical power installations. They are designed for application in machines, in order to reduce the starting torque and starting current peaks as well as the tripping torque of drives with three-phase induction motors.

Typical Applications:

- door and gate drives
- pumps
- ventilators
- conveying systems
- packaging machines

5. EC Declaration of Conformity

EC Declaration of Conformity CE

The manufacturer / company placing the product on the market
(authorized representatives of the manufacturer / companies placing the product on the market that are established within the Community)

Name / Address: PETER electronic GmbH & Co. KG
Bruckäcker 9
92348 Berg

hereby declares that the following product (device, component, unit) in the version as supplied

Product designation:	**Soft starters**
Series / type designation:	VersiStart II 3 ... 15L..
Article number:	257...
Year of manufacture:	2004

complies with the provisions of the following EU-directives:

2014/30/EU	Electromagnetic compatibility
2014/35/EU	Electrical equipment designed for use within certain voltage limits
2011/65/EU	The restriction of the use of certain hazardous substances in electrical and electronic equipment

The following harmonized standards have been applied:

EN 60947-1:2007+A1:2012	Low-voltage switchgear and controlgear General rules
EN 60947-4-2:2012	Low-voltage switchgear and controlgear Contactors and motor-starters - AC semiconductor motor controllers and starters

This EC Declaration of Conformity is no longer valid, if the product is modified or changed without our agreement.
This declaration is issued under the sole responsibility of the signatory.

Berg, 29.01.2026 Bernhard Tischner, Managing director
(place, date) (signatory and function of the signatory) (signature)

6. Block diagram

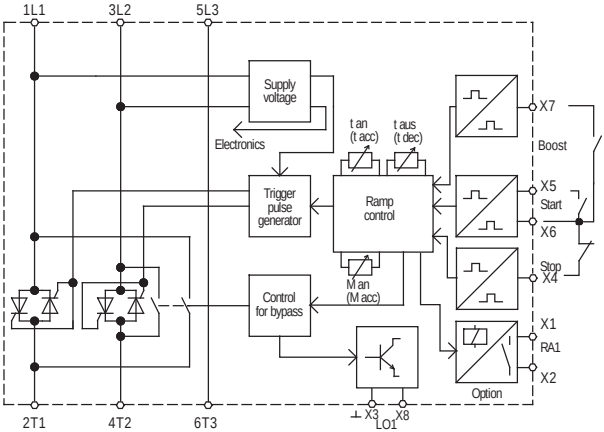

7. Commissioning

The device is to be put into operation in 3 steps:

1. Mounting
2. Connection and
3. Parameter setting

7.1 Mounting instructions

Caution: Danger to life through electric shock!

The following conditions are to be complied with in order to ensure a safe and reliable operation of the VersiStart II:

1. The device series VersiStart II is to be used under conditions of the overvoltage category III.
2. Make sure that pollution degree 2 or better, in accordance DIN EN60644-1 / IEC664, is complied with.
3. The device has to be installed into a housing (min. degree of protection: IP54).
4. The device must be operated without being exposed to contamination by water, oil, carbon deposits, dust, etc..

Warning:

To avoid heat concentrations, a distance of at least 40mm is to be kept between cable duct and device.

Place the device vertically on a perpendicular mounting plate with the motor terminals pointing downwards. The device is to be snap-mounted onto a 35mm top-hat rail according to DIN EN 50022. Underneath the device, no additional heat sources such as heating resistors must be mounted or arranged.

8. Connection Power section (see also connection diagram))

Terminal 1L1:	Mains voltage L1
Terminal 3L2:	Mains voltage L2
Terminal 5L3:	Mains voltage L3
Terminal 2T1:	Motor terminal U
Terminal 4T2:	Motor terminal V
Terminal 6T3:	Motor terminal W

9. Connection control section

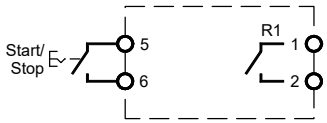

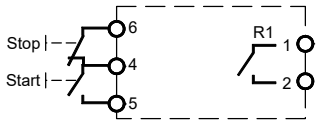

If the contact on the terminals X5 a. X6 is closed, the motor accelerates with the adjusted acceleration time ramp. When the contact is open, the motor decelerates with the adjusted deceleration time ramp. Please find an appropriate time sequence chart in chapter 15.4 on page 18.

If the contact on the terminals X4 and X5 is briefly closed, the motor starts with the adjusted ramp-up time. If the contact X4 and X6 is briefly opened, the motor runs down with the adjusted ramp-down time. Please find an appropriate time sequence chart in chapter 15.4 on page 18.

Caution: Danger to life through electric shock!

The motor is **not** physically separated from the mains.

If only soft starts are required, VersiStart II may also be controlled via the main contactor. For this purpose, the terminals X5 and X6 have to be bridged.

10. LED indicators

On the circuit board there are 2 light-emitting diodes indicating the following operational states.

LED	Operational status
Green	Device is connected to mains voltage
Yellow	Start completed, device bypassed
Yellow - flashing with increasing or decreasing frequency	Soft start / Soft stop

On the control terminal X1 / X2 (R 1) one signaling relays are available which signal the following operational states:.

R 1 **Fault.**

Under normal operating conditions the signaling contact R 1 is closed, it only opens if a fault occurs.

11. Parameter settings

On the front panel there are 3 potentiometers by means of which the following settings can be made.

Parameter	Poti	Setting range
Acceleration time	start time	Acceleration time adjustable from 0.5...10sec
Starting voltage	initail torque	0…80% of rated voltage
Deceleration time	stop time	adjustable from 0.5...10sec

12. Commissioning

12.1 Default setting of potentiometers:

Potentiometer start time	(acceler. time)	= mid-position
Potentiometer initial torque	(starting voltage)	= left stop (counter-clockwise)
Potentiometer stop time	(deceler. time)	= left stop (counter-clockwise)

12.2 Adjusting soft start

To adjust an optimum starting behavior, you should carry out a test run. Contrary to the default settings, you should make the following basic potentiometer-settings..

Fans, roller tracks, conveyor belts, etc.	start time 50%, initial torque 0%, stop time 0%
Centrifuges, conveyor screws, mixers, compressors, etc.	start time 50%, initial torque 50%, stop time 50%
Pressure pumps, etc.	start time 50%, initial torque 50%, stop time 50%

Switch on the supply voltage and start acceleration. Watch the starting behavior and adapt the approporiate parameters to your drive. At any rate, the starting voltage should be adjusted with the potentiometer „initial torque“ so that the motor starts immediately. At the same time, unnecessary humming with the motor being at rest is to be avoided.

The potentiometer „start time“ is to be adjusted so that the requested acceleration time or starting characteristics is achieved. The acceleration time should always be chosen as short as possible, in order to keep the thermal stress acting on device and motor as small as possible. This leads to short times until the bypass relays pull in and ensures good acceleration characteristics while the power semiconductors and motor are less heated. This is of special importance in the case of high-inertia starting or high switching frequencies. The acceleration time, however, has to be adjusted so that the motor reaches nominal speed before the internal bypass relays close.

Warning:

If the adjusted acceleration time is too short, the internal bypass relays close **before** the motor has reached nominal speed. This can cause damage to the bypass relays.

12.3 Adjusting soft stop

Note: Soft stop is only useful for pump drives or applications in the case of which the drive comes to a stop **immediately** after switch off. In the case of drives driving high-inertia loads, soft stop is not sensible.

Note: **To enable soft stop, the VersiStart II, during the deceleration phase, has to be supplied with power from the supply mains.**

In the case of these devices, the cut-off voltage is factory-set to 70%.

The potentiometer „stop time“ is to be adjusted so that the requested deceleration time or deceleration characteristic is reached.

Caution: Danger to life through electric shock!

Even if the motor is at rest, it is not physically separated from the mains.

Warning!

Make sure that the specified switching frequency is not exceeded!

13. Technical data

Type designation	VersiStart II ... L ..				
	3	5,5	7,5	11	15
Mains / motor voltage acc. to DIN EN 50160 (IEC 38)	400V ±10% 50/60Hz				
max. Motor rating at 380/415V (rated power)	3kW	5,5kW	7,5kW	11kW	15kW
max. Motor rating at 380/415V (rated power) IE3-Motors	2.2kW	4kW	5.5kW	7.5kW	11kW
Rated device current	6,5A	12A	15A	25A	32A
min. Motor load	20% of the device rated current				
Acceleration time	0,5 … 10s				
Deceleration time	0,5 … 10s				
Restart time	200ms				
max. Switching frequency at 3x I_N and 5s t_{an}	120/h	65/h	100/h	65/h	35/h
Cross-sect. area for connection: Control terminals	1,5mm²				
Cross-sectional area Fast ON 6.3	1,5mm²		2,5mm²		Litz 2,5mm²
I²t - Power semiconductors	265A²s	610A²s	4900A²s	4900A²s	6050A²s
External semiconductor fuse	25A	35A	60A	100A	125A
Contact rating of output relay R 1	3A/250V AC 3A/30V DC				
Weight	270g		400g		
Special voltages (optional)	230V / 480V				

13.1 Environmental conditions

Storage temperature	-25 ... 75°C
Power reduction[a]	above 40°C - 2% per 1°C up to max. 60°C and altitudes above 1000m -2% per 100m
Ambient temperature	0 ... 40°C up to an installation altitude of 1000m, not exposed to moisture condensation
Degree of protection	IP 00
Environment	Overvoltage categ. III (TT / TN-systems), pollution degree 2
Installation class	3

a. The reductions refer to rated power output.

Note: Please pay attention and consider for the operation of IE3 motors while dimensioning of softstarters the resulting higher starting currents.
For the use of IE3 motors we highly recommend to dimension and design the needed softstarters one size higher.

14. Dimensioning rules

14.1 Dimensioning of pre-fuses

Pre-fuses F can be dimensioned according to the following instructions.

Basically, two types of fuse protection are available for the user.

1. Fusing according to allocation type „1“, DIN EN 60947-4-2.
   After a short circuit, the VersiStart II device is allowed to be inoperative and repair work is possible.
2. Fusing according to allocation type „2“, DIN EN 60947-4-2.
   After a short circuit, the device must be suitable for further use. However, there is the danger that the contacts of the bypass or braking relays weld. Therefore, if possible, these contacts are to be checked prior to reconnecting these contacts to the mains supply. If this check cannot be carried out by the user, the device has to be returned to the producer in order to have it checked.

The following dimensioning information refers to the below operating conditions:

- Use of standard asynchronous motors
- Standard acceleration and/or deceleration times
- Switching frequencies not exceeding the values specified in the data sheet

Fusing according to allocation type „1“

As pre-fuses we recommend to use fuses of the utilization category gG.
The fuse values are to be determied by taking the conductor cross-sectional area of the wiring into account. Depending on the rated motor current, the maximally occurring starting current (normally up to the 5-fold rated device current) and the starting frequency, the wiring cross-sectional area is to be determined. Table 1 shows the values for numerous applications, i.e., with a 3-fold nominal current as mean starting current and a max. starting time of 10s. In the case of parameter values exceeding these values, it may be necessary to adapt the fuse value accordingly.

Note: Wiring cross-sectional area according to DIN VDE 0100-430, DIN EN 57100-430.

Fusing according to allocation type „2“:

The power semiconductors are to be protected by fuses of the utilization class gR (semiconductor protection fuses, high-speed fuses). However, since these fuses do not ensure line protection, it is necessary to use additionally line protection fuses (utilization category gL).
To protect the semiconductors it is necessary to select gR-fuses featuring cutoff-I^2t-values which are approx. 10-15% below the I^2t-value of the power semiconductor (see technical data). In this connection, the fuse rating of the selected fuse should not be smaller than the starting current to be expected.

Note: PETER electronic does not prescribe the use of semiconductor protection fuses. However, for some UL- or CSA-listed devices there are exceptions which are indicated in the relevant commissioning instructions.

Note 1 On the basis of the I^2t-value of the power semiconductors, the starting time and possibly the max. starting current, the fuse supplier is able to select a suitable type. Due to the great variety of producers, sizes and types, PETER electronic does not recommend any particular fuses.

Note 2 If the value of the fuse or the cutoff-I^2t-value is selected too small, it may happen that the semiconductor fuse reacts during the starting phase or during deceleration..

Rated device current (techn. data)	Device type	**Fuse value in the case of allocation type** 1	Starting frequencies Starts / h
6,5A	VS II 3 L ..	16A	40
12A	VS II 5,5 L ..	20A	20
15A	VS II 7,5 L ..	35A	30
25A	VS II 11 L ..	50A	20
32A	VS II 15 L ..	63A	10

Tabelle 1

15. Installation guideline

15.1 Connection

The device is to be installed according to the attached connection diagram. For other connections please consult PETER electronic GmbH & Co. KG.

Note: Further connection diagrams for special circuit arrangements are available on our homepage at **www.peter-electronic.com**.

Note: Prior to putting the VersiStart II into operation the wiring is to be checked.

15.2 EMC

The limit values for emitted interference according to the applicable device standards do not rule out the possibility that receivers and susceptible electronic devices within a radius of 10m are subjected to interference.

If such interference, that is definitely attributable to the operation of the soft starters , occurs, the emitted interference can be reduced by taking appropriate measures.

Such measures are, e.g.:

to connect reactors (3mH) or a suitable mains filter in series before the soft starter, or to connect - capacitors (0,15µF) in parallel to the supply voltage terminals.

General connection diagram

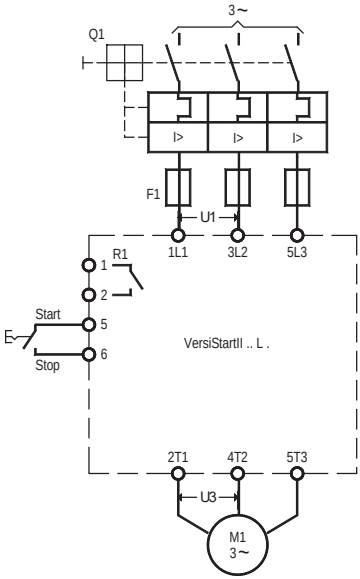

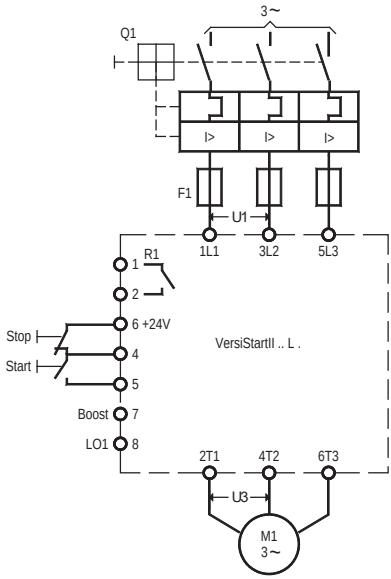

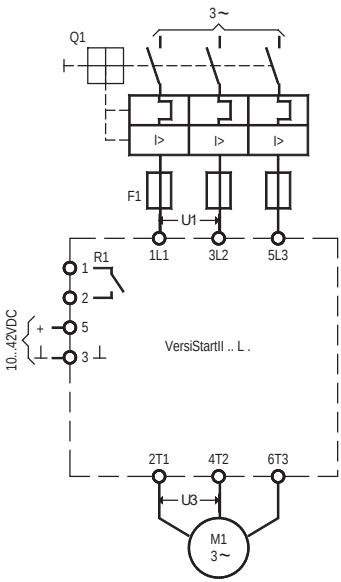

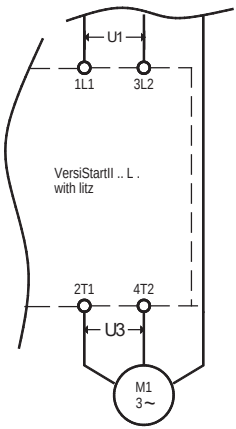

15.3 Typical connections

Standard circuit

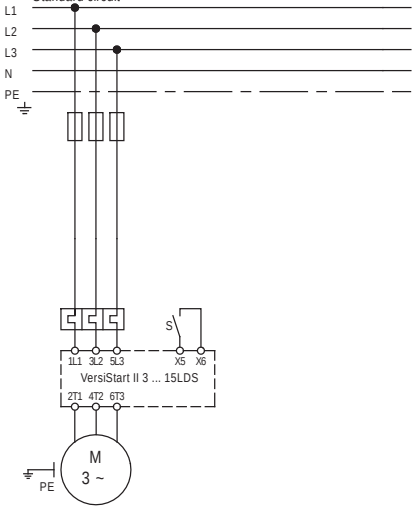

S - closed = acceleration; S - open = deceleration

Reversing circuit

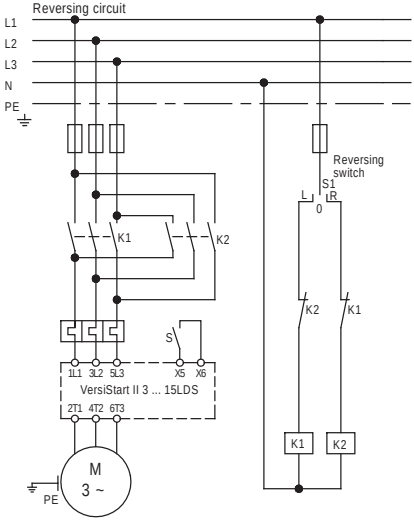

S - closed = acceleration; S - open = deceleration

Standard circuit for pole-changing motors

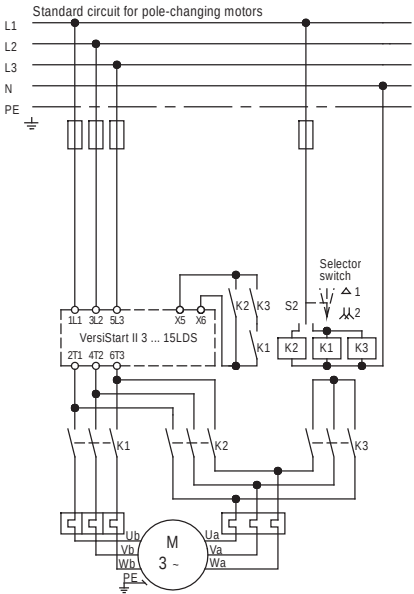

Reversing circuit for pole-changing motors

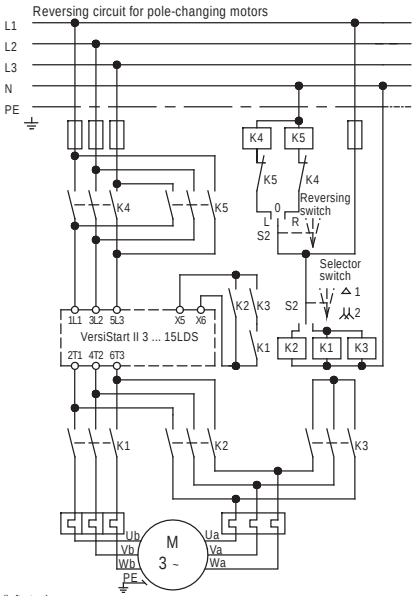

for pole-changing motors turn trimmer t aus to 0 (left stop)

Further connection diagrams are available via the internet at **www.peter-electronic.com**

15.4 Zeitablaufdiagramm

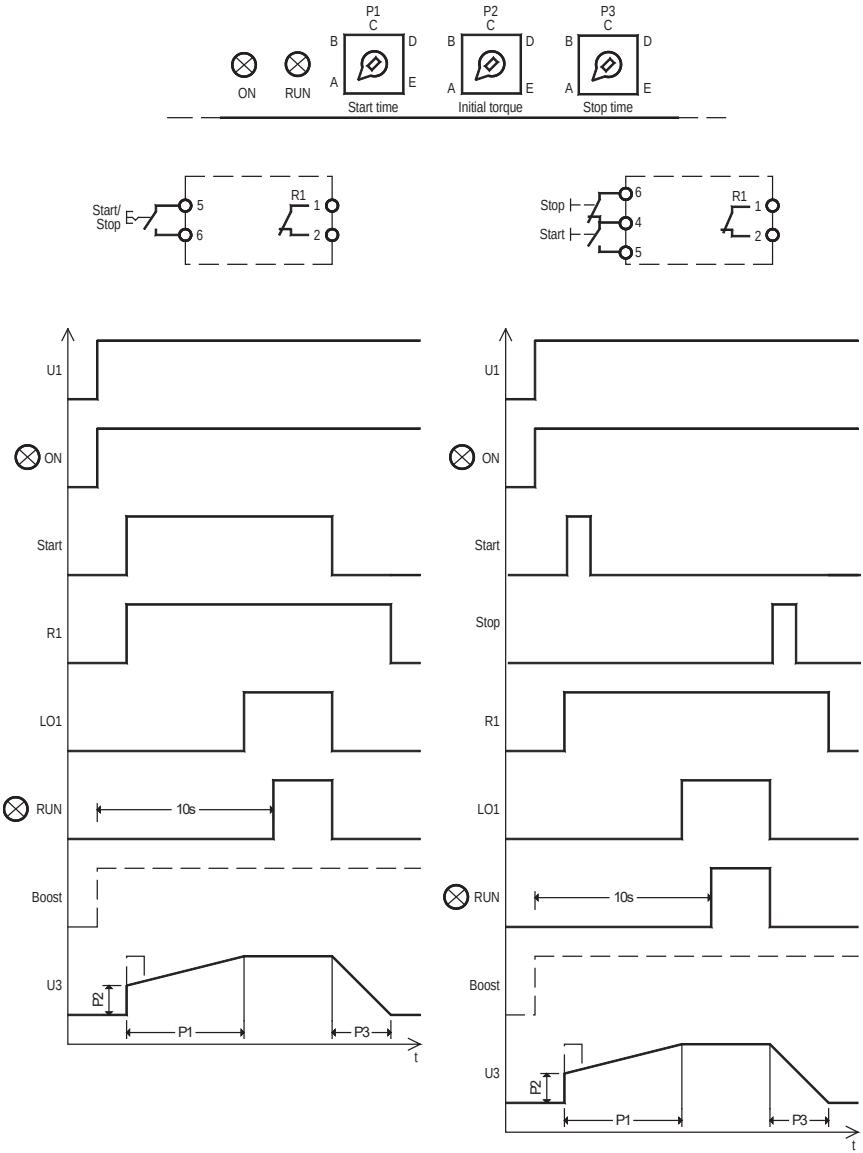

15.5 Dimensions

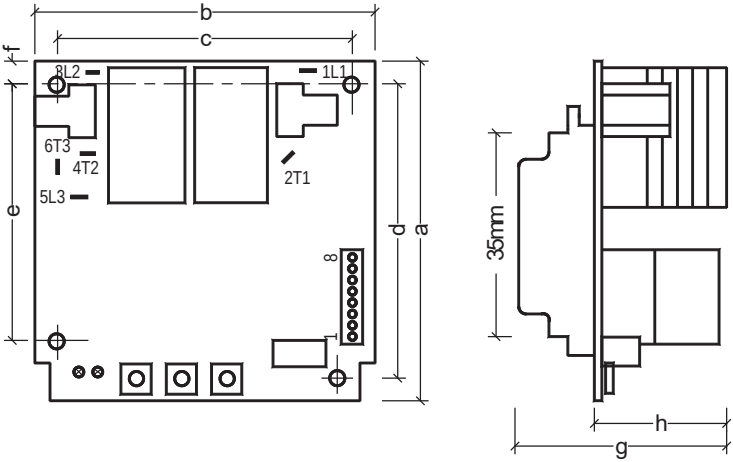

Mounting dimensions	a	b	c	d	e	f	g	h
VersiStart II 3 ... 5,5L..	102,5	108,5	98,5	92,5	82,5	5,0	55,0	40
VersiStart II 7,5 ... 15L..	102,5	139,0	129,0	92,5	82,5	5,0	55,0	40

All dimensions indicated in mm.

Phone: +49(0)9189/4147-0 Fax: +49(0)9189/4147-47 eMail: mail@peter-electronic.com

www.peter-electronic.com